Sandberg®

5 Years Warranty



Quick Guide

134-44

www.sandberg.world

Face Scan Webcam Mini Pro

Overview

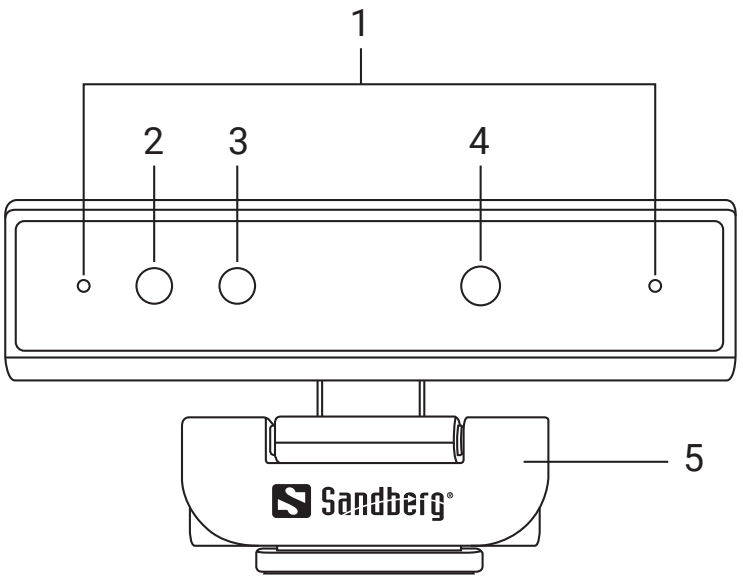

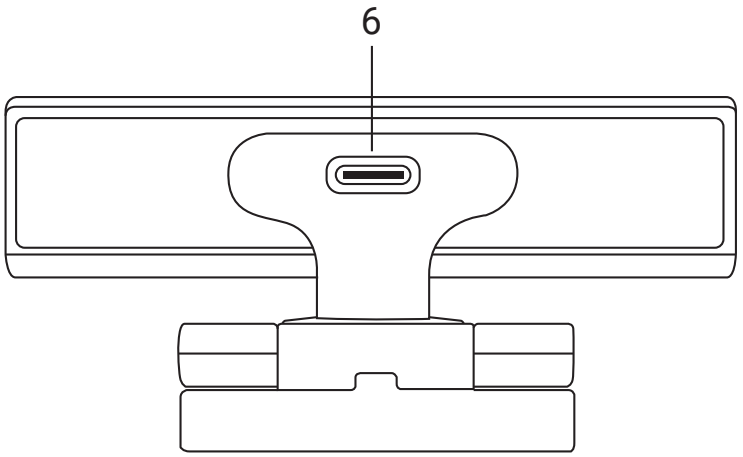

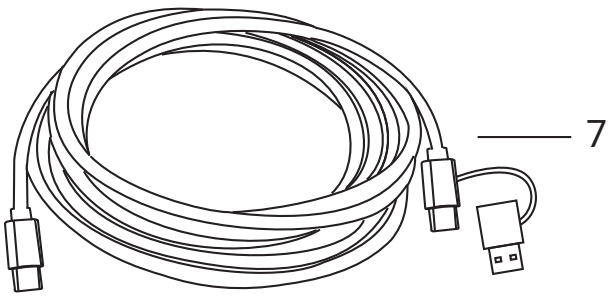

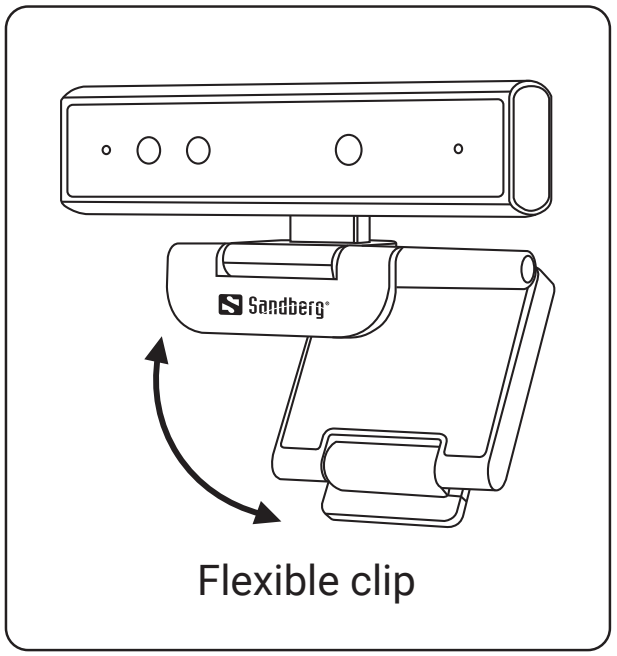

1. Microphone
2. IR Led Light
3. IR Sensor
4. Camera lens
5. Adjustable mount
6. USB-C interface
7. USB-C to USB-C/A cable

Connection



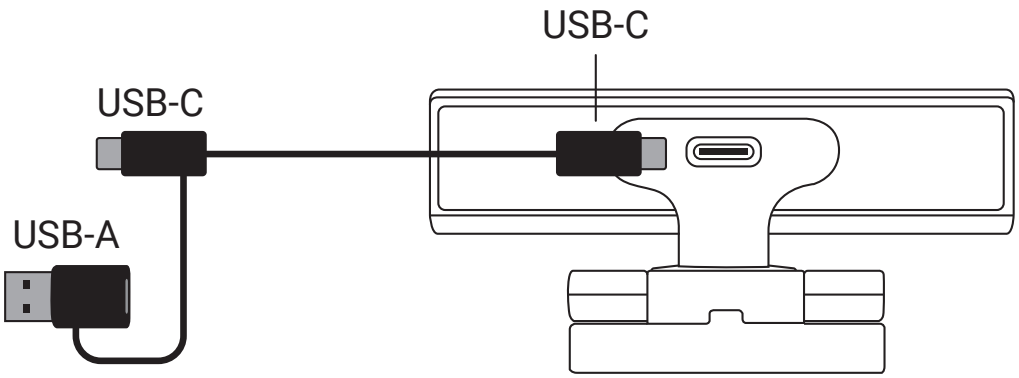

Connect alternatively by USB-A.

Mounting

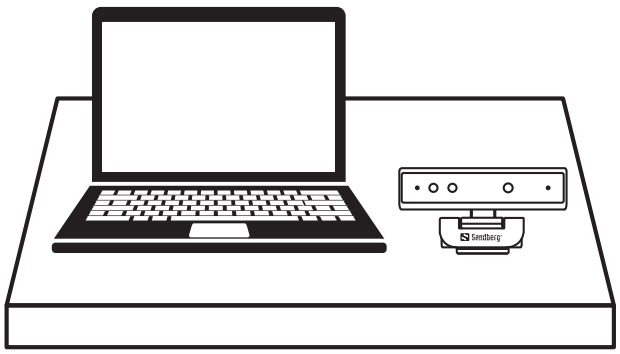

On a Desk

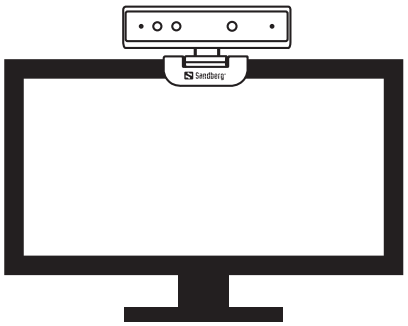

On a PC Monitor

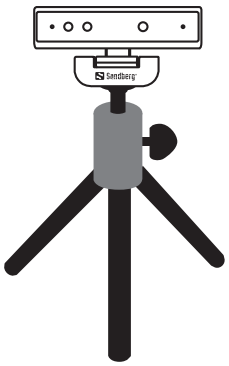

On a tripod, for example Sandberg item no. 134-26

Support

helpdesk.sandberg.world

Warranty

There is a five-year warranty on your Sandberg product. Please read the warranty terms and register your new Sandberg product at www.sandberg.world/warranty

Setting Up
Windows Hello function

5
Years
Warranty

Face Scan Webcam Mini Pro Item no. 134-44

www.sandberg.world
info@sandberg.world
Sandberg A/S
Bregneroedvej 133D,
3460 Birkeroed, Denmark
Made in China

For information on handling electronic waste, see www.sandberg.world/weee